VESPER PLAY CENTER

CATIT.COM

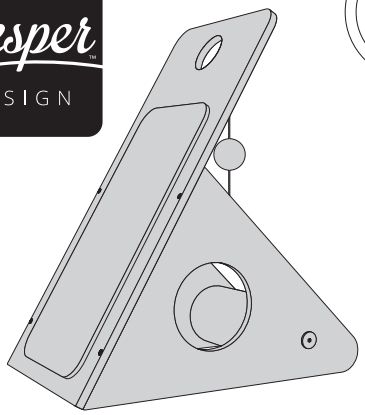

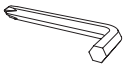

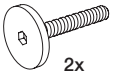

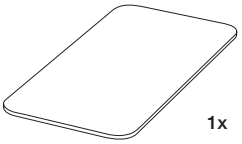

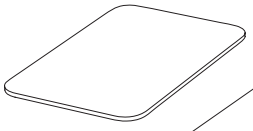

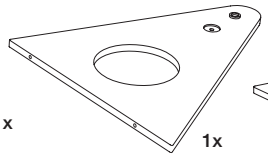

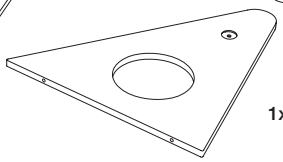

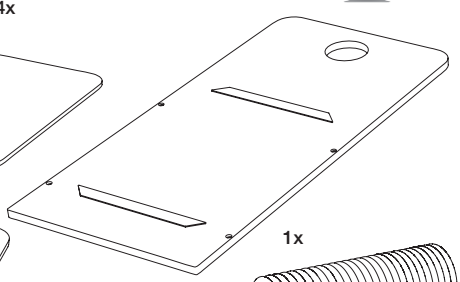

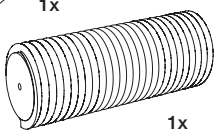

1

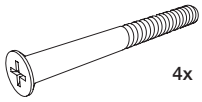

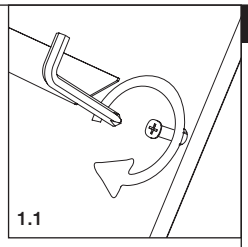

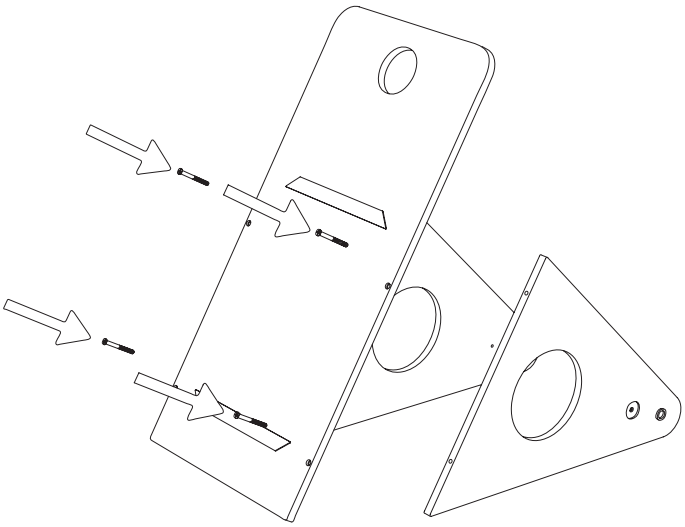

2

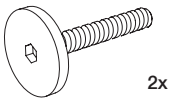

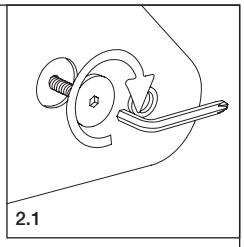

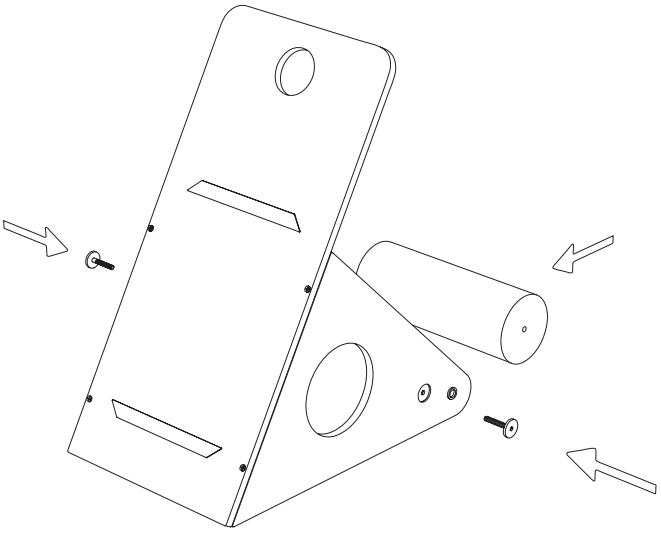

3

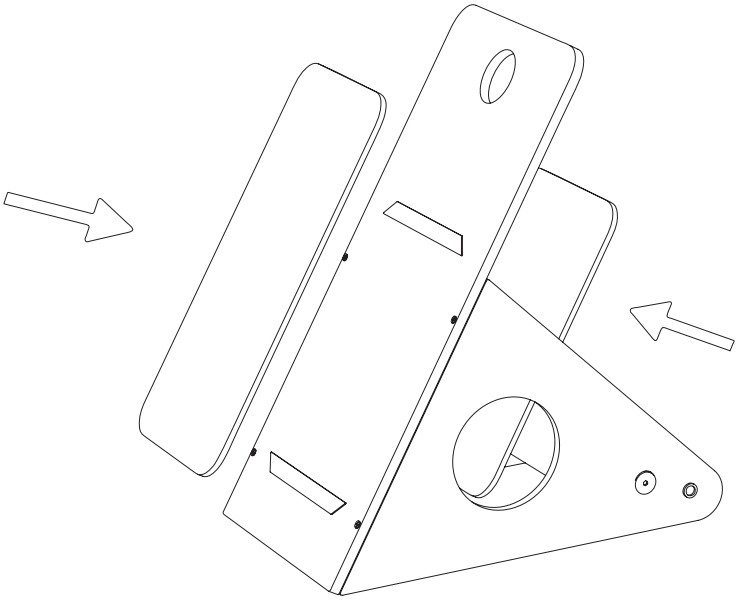
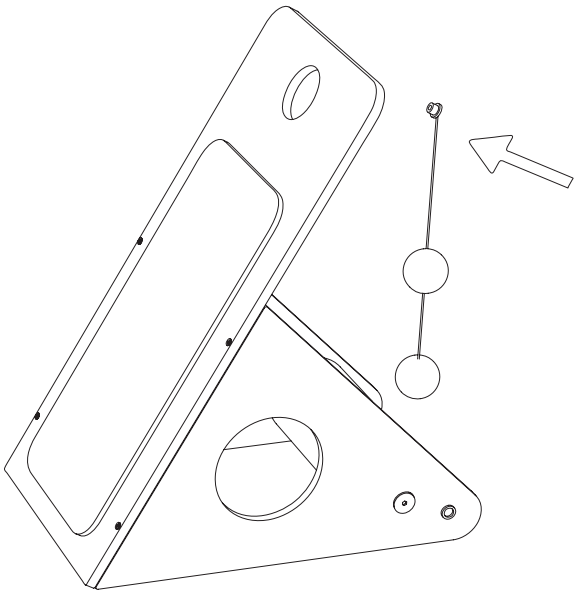
4