catit

Vesper DESIGN

VESPER DOUBLE
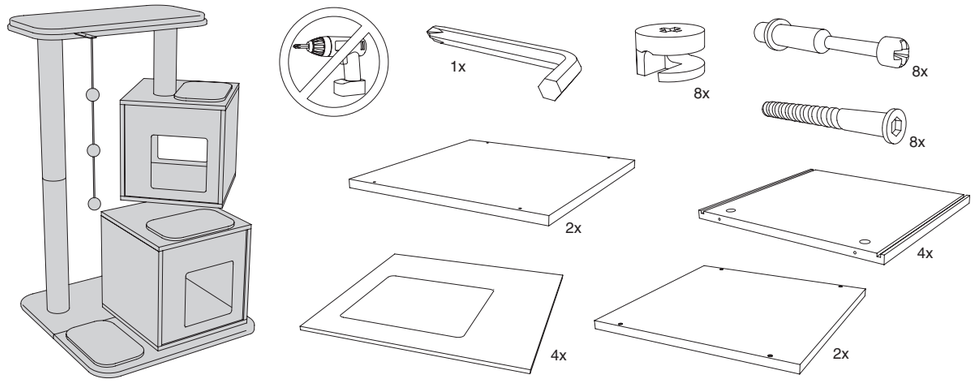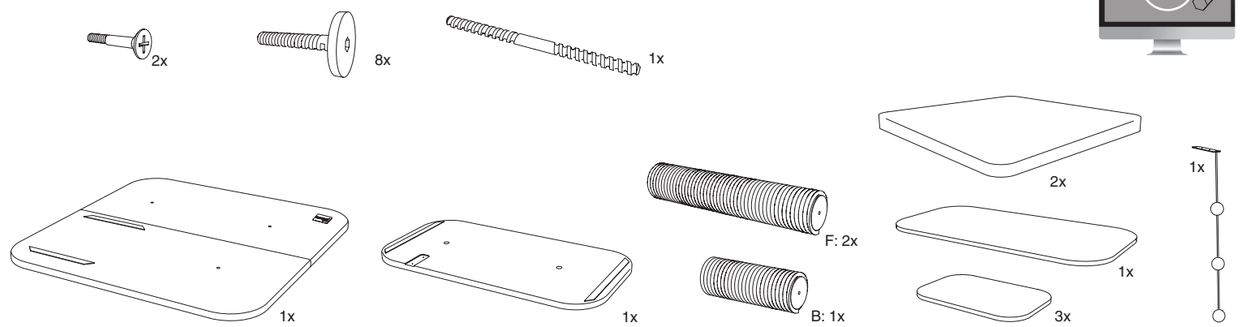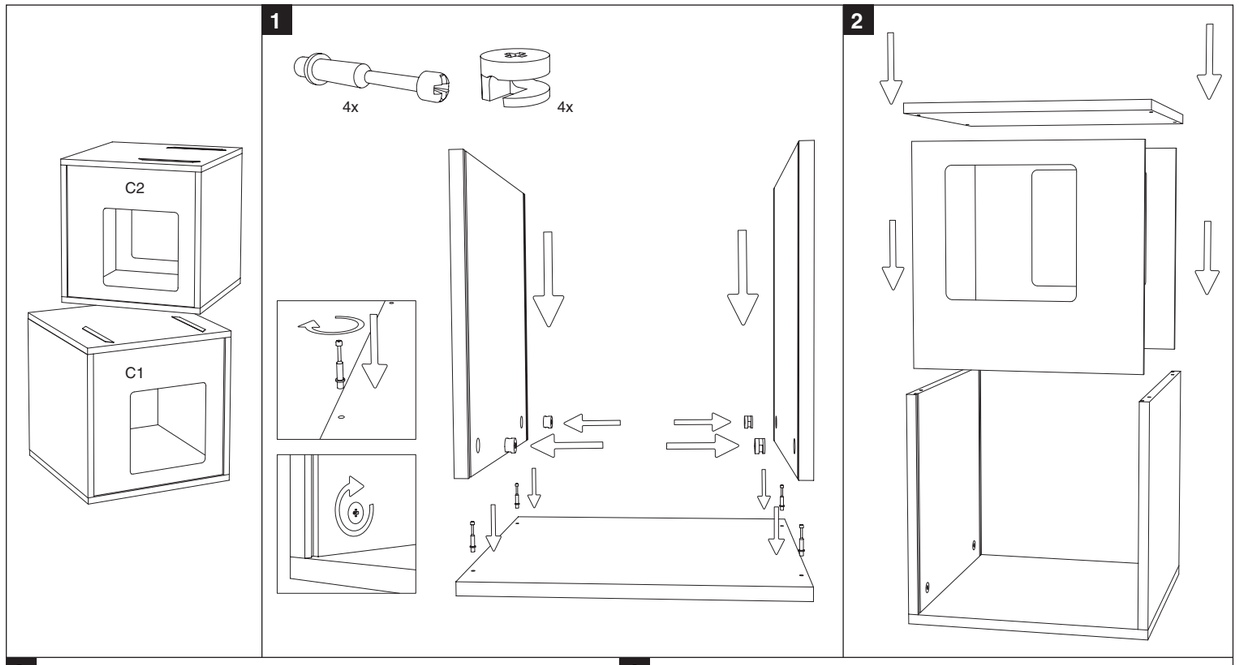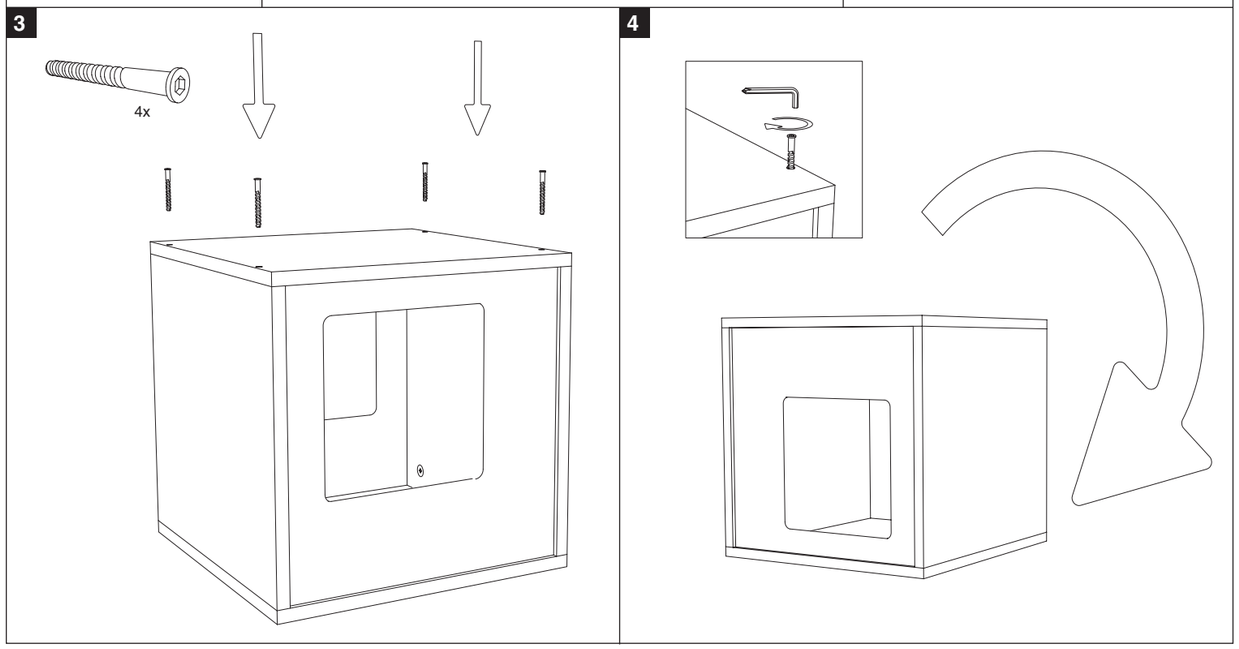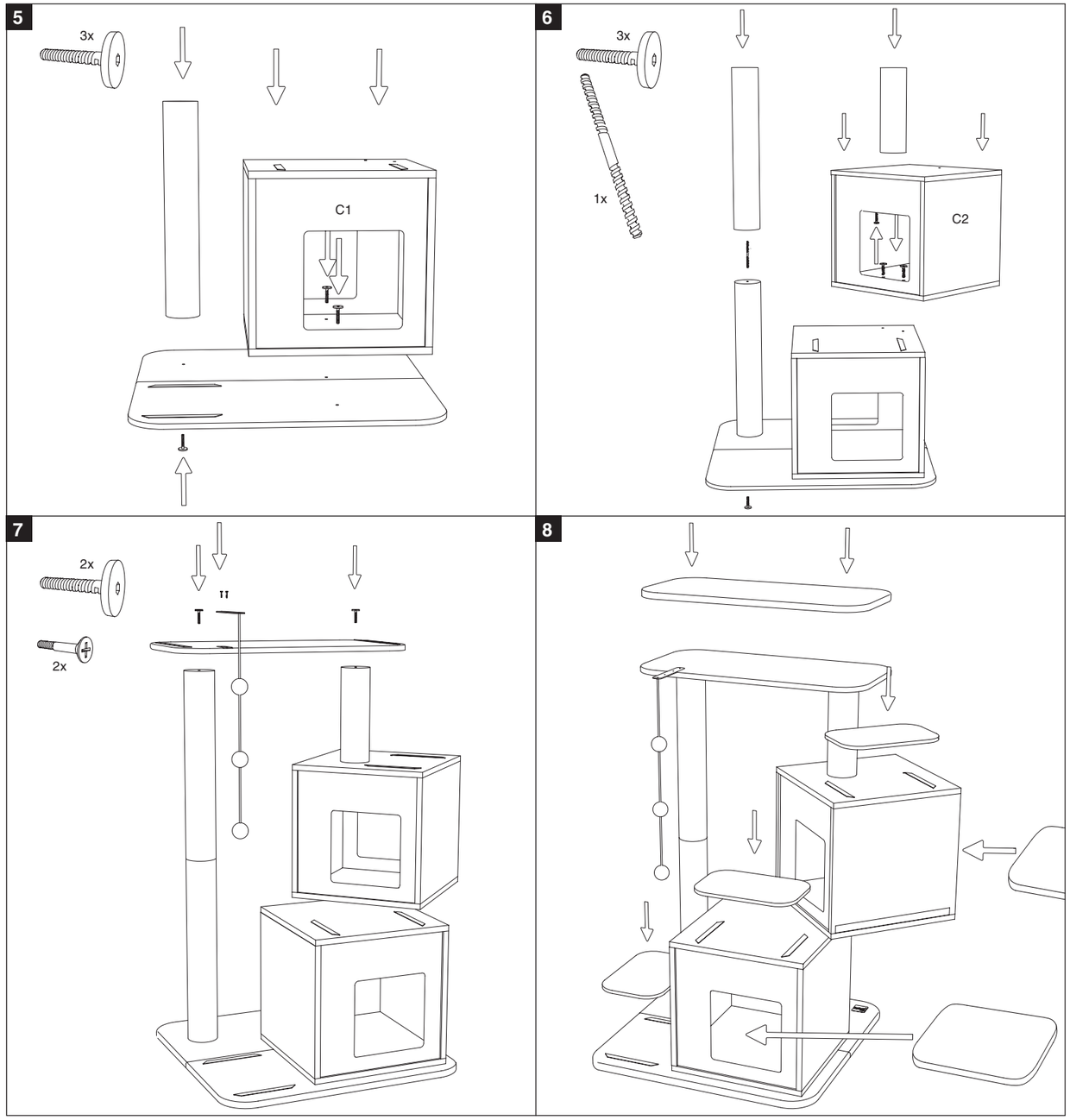
CATIT.COM